Using LEDs – It's Easy!

LIGHT EMITTING DIODES or 'LEDs' are now very widely used in almost every area of electronics, mainly as indicator and display devices — in effect, 'solid state lamps'. They're very well suited for this kind of use, because they are physically quite rugged and hence much more reliable than filament-type incandescent lamps. They also run much cooler and are much more efficient, requiring far less electrical power input for the same amount of light output.

Other common uses for LEDs are as a source of either visible or infra-red light, transmitted as a carrier for data and other information over short 'line of sight' distances.

A LED is basically just a specialised type of P-N junction diode, made from a thin chip of fairly heavily doped semiconductor material. When it is forward biased to reduce the potential barrier provided by the junction's narrow depletion layer, electrons from the semiconductor's conduction band can combine with holes from the valence band, releasing sufficient energy to produce photons of light. Because the chip is thin a reasonable number of these photons can leave it and radiate away as its light output.

Unlike diodes made for detection and rectification, which are generally made from either germanium or silicon, LEDs are made from *compound* semiconductor materials such as gallium arsenide (GaAs), gallium phosphide (GaP), gallium arsenide-phosphide (GaAsP), silicon carbide (SiC) and gallium indium nitride (GaInN). The exact choice of semiconductor determines the wavelength of peak emission of photons — and hence the colour of the light emitted, in the case of visible light LEDs. It can also determine the electro-optical conversion efficiency, and hence the light output for a given amount of forward conduction current.

Another parameter determined by the compound semiconductor used in a LED is the forward voltage drop for a given forward conduction current.

Table 1 shows the peak emission wavelength for the most common types of LED, with the nominal colour indicated and also the typical forward voltage drop for a current level of 20mA. The construction of a typical LED is shown in Fig.1 above. LEDs with leads like that shown are made in a variety of package shapes and sizes, of which the 3mm, 5mm and 10mm diameter 'bullet' type with a spherical front lens are the most common. Other much smaller packages are used for surface-mount LEDs.

Table 1: Typical LED characteristics

Nominal Colour	Semiconductor material	Peak Emission wavelength	VFORWARD @ 20mA	
			Typical	Range
Infra-red	GaAs	870-940nm	1.2V	1.1 - 1.6V
Red	GaAsP/GaP	650-700nm	2.0V	1.5 - 2.6V
Orange	GaAsP/GaP	620-650nm	2.0V	1.7 - 2.8V
Yellow	InGaAlP	580-620nm	2.4V	1.7 - 3.0V
Green	GaP	510-560nm	2.8V	1.7 - 4.0V
Blue	GaN/SiC	420-470nm	3.6V	3.2 - 4.3V
White	GaN/SiC	460 +570nm	3.6V	3.2 - 4.3V

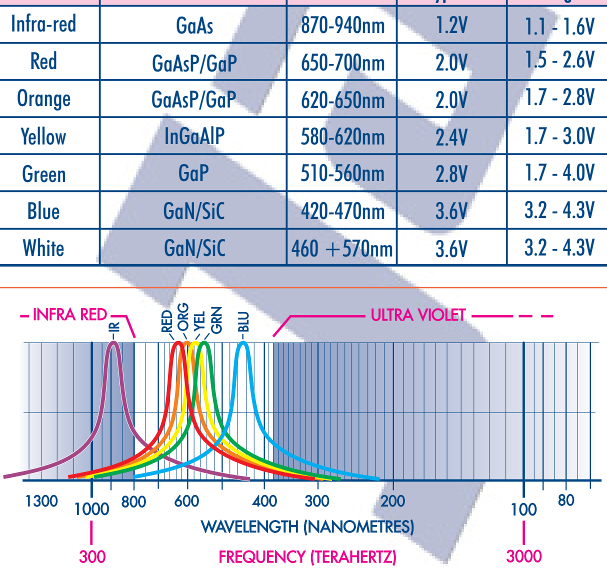

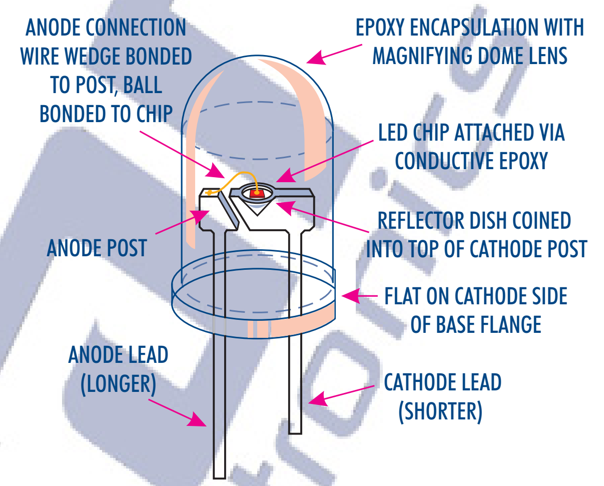

Fig.1: The construction used for most common 'leaded' LEDs.

How they're used

In most cases LEDs are operated from a low voltage DC supply, with a series resistor (Fig.2) to limit the forward current to a suitable value — from say 5-6mA for a simple pilot lamp or status indicator application to 20mA or more where more light output is needed. As you can see the series resistor value is easily worked out knowing the required operating current IF, the supply voltage and the LED's forward voltage drop at this current level.

The LED's voltage drop VLED can usually be estimated from the figures given in Table 1 for a current of 20mA, although the actual voltage drop will be a bit lower for much lower current levels. Note that the resistor value is

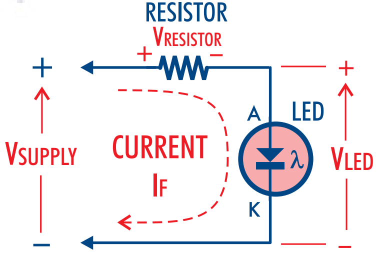

$$V_{LED} + V_{RESISTOR} = V_{SUPPLY}$$

$$\text{So } V_{RESISTOR} = V_{SUPPLY} - V_{LED}$$

$$\text{And } V_{RESISTOR} = I_F \times R_{RESISTOR}$$

$$\text{So } R_{RESISTOR} = \frac{V_{SUPPLY} - V_{LED}}{I_F}$$

Where VLED is found from LED data
and IF is chosen to give desired
light output (brightness)

Fig.2: In most cases LEDs are operated from DC, and a simple series resistor is used to set the forward current level. The value of the required resistor is easily calculated knowing the LED's forward voltage drop, the supply voltage and the current you want, as you can see.

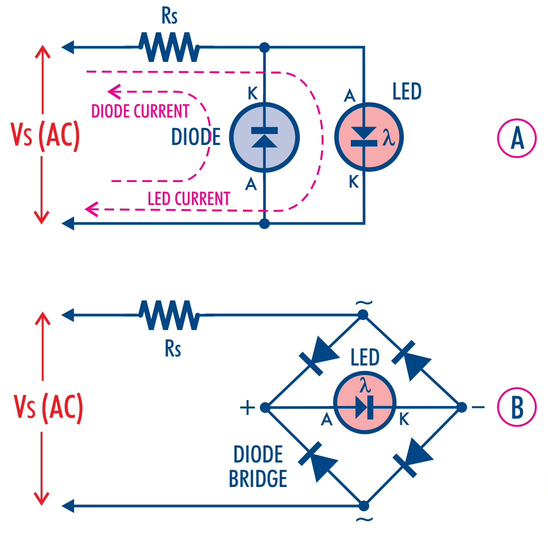

Fig.3: If you do need to run a LED from an AC supply, there are a couple of ways of doing so. In A above a reverse-connected diode is used to limit the LED's reverse voltage to about 0.6V, while in B a diode bridge rectifier is used to ensure that the LED receives only unidirectional rectified current.

not especially critical, so once you calculate the theoretical resistor value you can pick the nearest preferred value.

It's important to realise that LEDs are designed to operate **ONLY** in forward conduction mode, and should not be subjected to reverse voltage. They have a reverse voltage rating of 5V or less, so they can be damaged by accidental reverse connection.

If a LED does need to be operated from an AC supply, or from a signal source which cannot be relied upon not to reverse its polarity, it can be protected by one of the methods shown in Fig.3. The simplest approach is shown in A, where a reverse connected silicon diode is connected directly across the LED to limit any reverse voltage to 0.6V. This protects the LED, but of course no light is emitted for the negative half-cycles of the AC waveform — even though current is still drawn from the supply. So the light output and efficiency are both effectively halved.

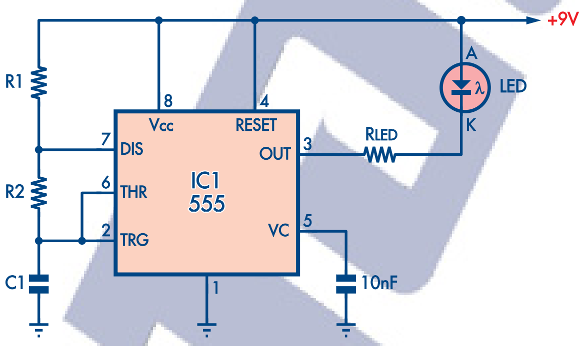

T_{LOW} (LED on) = 0.693 x C1 x R2

T_{HIGH} (LED off) = 0.693 x C1 x (R1 + R2)

Fig.5: How to use a 555 timer chip to operate a LED in pulsed current mode. Capacitor C1 can be chosen to set the pulsing/flashing frequency, while resistors R1 and R2 are chosen to set the LED on and off times. For a 10% duty cycle for example, you'd make R1 nine times the value of R2.

The method shown in B is more efficient, and also maintains the LED's light output. Here a bridge of four diodes is used to ensure that the current always flows through the LED in the forward direction, regardless of supply polarity. But notice that the voltage drop of two diodes — about 1.2V — needs to be taken into account when the value of series resistor Rs is being calculated.

Need more light?

The maximum continuous light output from a LED (usually measured and rated in **millicandelas**) is essentially limited by the maximum average forward current which it can handle, which is determined mainly by the LED chip's power dissipation rating — typically less than 100mW for plastic encapsulated devices.

When higher light output is required, the usual approach is to operate the LED not from a steady DC supply, but from a pulsed current with a fairly short duty cycle (on-off ratio). This allows the current and hence the light output to be increased significantly during the actual pulses, while still keeping the LED's *average* current level and power dissipation within its ratings (Fig.4).

Why does this pulsed output give an advantage? Partly because the efficiency of LEDs actually tends to increase with current level. So short pulses of significantly higher output separated by periods of no output actually result in a higher average *light* output, for the same average *current*.

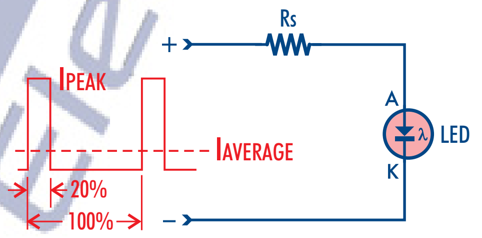

Fig.4: To get more light output from a LED, it can be run from a higher current but pulsed, so the average current is still within the LED's ratings...

Also, the human eye's persistence of vision tends to 'fill in the gaps' between the light pulses, providing the pulse repetition frequency is higher than the eye's critical fusion frequency (CFF). So light pulsing at a frequency of 100Hz or more actually appears steady, but brighter than the light resulting from the same continuous average current.

A simple low cost LED pulser using a 555 timer device is shown at left in Fig.5. The value of capacitor C1 can be chosen to set the pulse rate, after which resistor R2 can be chosen to set the LED's on time. Then the value of R1 is selected to give the desired duty cycle. For example R1 has a value of nine times that of R2 for a duty cycle of 10%.

If you use this circuit to obtain the highest average light output from a LED, for example, you might use a value of say 100nF for C1 and values of 120k and 15k for R1 and R2 respectively. RLED could then be chosen to give a peak LED current of 200mA (i.e, about 33Ω for a typical red LED).

The same circuit can also be used to make an ordinary LED 'flash' quite slowly and visibly, so it's easily seen even when running at a very low average current. For this kind of use you'd make C1 470nF, R1 2.7MΩ and R2 330kΩ, and make RLED about 330Ω. This gives only 2.1mA of average LED current, but it will clearly 'flash' once per second.